PC-753C

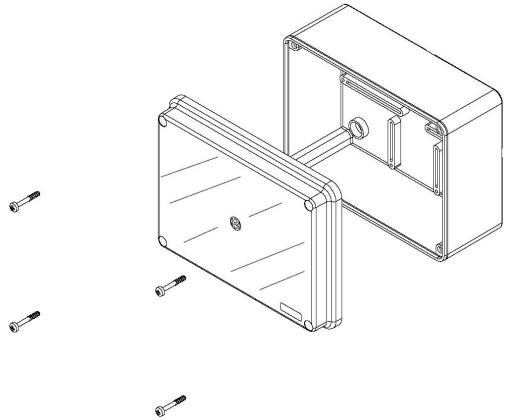

Typical image

Basic Internal Dimensions

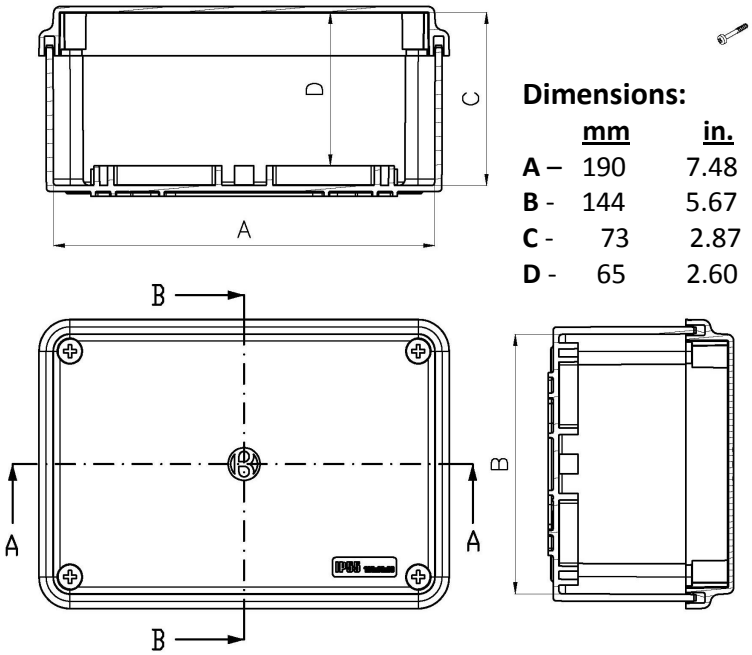

Dimensions:

	mm	in.
A –	190	7.48
B -	144	5.67
C -	73	2.87
D -	65	2.60

Internal Mounting Dimensions

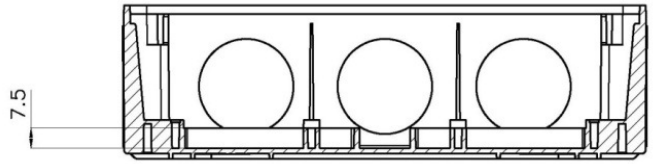

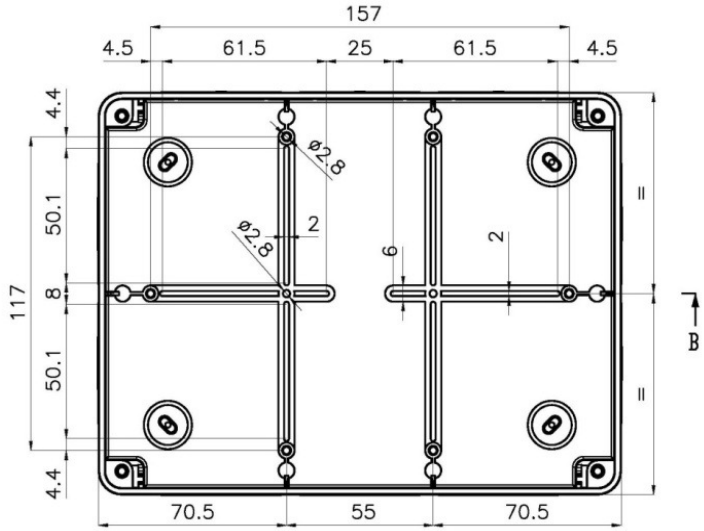

External Dimensions

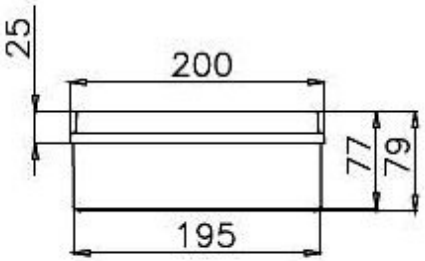

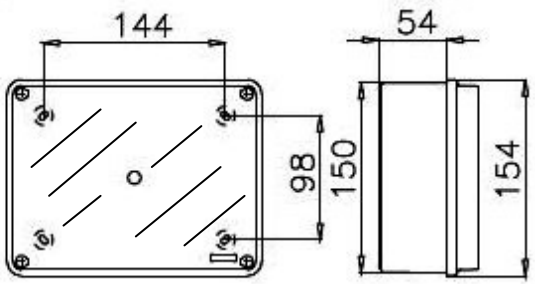

All Dimensions are in Millimeters.

Optional Mounting Plate

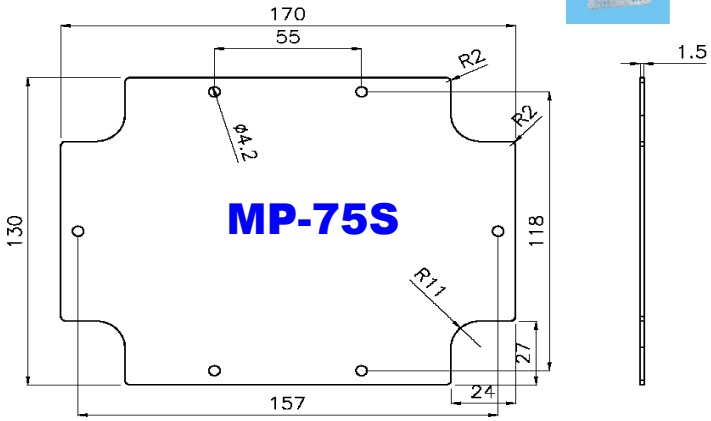

IBOCO